RESILIENT POWER PROJECT CASE STUDY

Boulder Housing Partners Resilience Upgrades

Marriele Robinson, Clean Energy Group

November 2018

RESILIENTPOWER

A project of Clean Energy Group

RESILIENT POWER PROJECT CASE STUDIES

This case study is one in a series by Clean Energy Group (www.cleanegroup.org) as part of The Resilient Power Project (www.resilient-power.org), a joint project with Meridian Institute (www.merid.org). This project seeks to expand the use of clean, distributed generation for affordable housing and critical community facilities to avoid power outages; to build more community-based clean energy systems; and to reduce the adverse energy-related impacts on vulnerable populations. This case study series highlights installations of solar PV and battery storage (solar+storage) systems to demonstrate their economic, community resiliency, and health benefits. More information about this project and others can be found at www.resilient-power.org.

ACKNOWLEDGEMENT

This material is based upon work supported by the Department of Energy under Award Number DE-OE0000785.

DISCLAIMER

This report is for informational purposes only. The authors make no warranties, expressed or implied, and assumes no legal liability or responsibility for the accuracy, completeness, or usefulness of any information provided within this document. The views and opinions expressed herein do not necessarily state or reflect those of report's funders or any of the organizations and individuals that have offered comments as this document was being drafted. The authors alone are responsible for the contents of this report. The information contained within is subject to change. It is intended to serve as guidance and is not intended to provide investment advice or a recommendation or solicitation to invest in any products, services, organizations, or companies that may be mentioned.

This report was prepared as an account of work sponsored by an agency of the United States Government. Neither the United States Government nor any agency thereof, nor any of their employees, makes any warranty, express or implied, or assumes any legal liability or responsibility for the accuracy, completeness, or usefulness of any information, apparatus, product, or process disclosed, or represents that its use would not infringe privately owned rights. Reference herein to any specific commercial product, process, or service by trade name, trademark, manufacturer, or otherwise does not necessarily constitute or imply an endorsement, recommendation, or favoring by the United States Government.

Cover image: Solar panels of the roof of the BHP office building. ©Independent Power Systems

Table of Contents

THE CHALLENGE: Powering Critical Services During an Outage 5
THE SOLUTION: Hybrid Solar PV plus Battery Storage System 5
Resilient power supply 6
Financial benefits. 6
Smart controls. 6
Emissions reduction. 6
FINANCIAL DETAILS 8
Project costs and grant funding 8
The Economic Case for Energy Storage 8
Demand costs 8
Outage costs 9
LESSONS LEARNED 9
Reliable power. 9
Backup generator for battery charging 9
Outage costs in system economics. 9
APPENDICES 10
APPENDIX A: System Design 11
APPENDIX B: 2017-2018 Demand Charge Comparison 12
APPENDIX C: Photos 13
SOURCES 15
ENDNOTES 15

Boulder Housing Partners Resilience Upgrades
Boulder, Colorado

PROJECT CONTACTS

City of Boulder, Lex Telischak, Electrical Engineer

Phone: 303-441-3442

telischakl@bouldercolorado.gov

Boulder Housing Partners, Tim Beal, Director of Sustainable Communities

Phone: 720.564.4651

bealt@boulderhousing.org

Independent Power Systems, Tony Boniface, President IPS

Phone: 303-443-0115

tboniface@solarips.com

Clean Energy Group, Seth Mullendore, Vice President and Project Director

Phone: 802-223-2554 x213

seth@cleanegroup.org

LEARN MORE

Featured Installations Page: Boulder Housing Partners Resilience Upgrades

More information about this project can be found on the Clean Energy Group's website, under the Resilient Power Project's featured installation page. This webpage includes a project summary, photos, and links to additional project resources, including webinar recordings, blog posts, and news articles. This page is updated periodically with new information and materials.

www.cleanegroup.org/ceg-projects/resilient-power-project/featured-installations/boulder-housing-partners/

Webinar: Supporting Housing and Mobility with Resilient Power in Boulder

Clean Energy Group hosted webinar, October 2018. Recording available at

www.cleanegroup.org/webinar/supporting-housing-and-mobility-with-resilient-power-in-boulder/.

As part of the Resilient Energy Delivery Infrastructure grant, the City of Boulder funded resilience projects at two organizations: Boulder Housing Partners and Via Mobility Services.

To learn more about the Via Mobility Services project, see

www.cleanegroup.org/ceg-projects/resilient-power-project/featured-installations/via-mobility-services.

Boulder Housing Partners Resilience Upgrades

The largest affordable housing provider in Boulder installed a solar+storage system to provide command post services during emergencies.

THE CHALLENGE: **Powering Critical Services During an Outage**

As natural disasters increase in occurrence and severity, cities face the challenge of powering community services during outages. Vulnerable populations are disproportionately impacted[1] during extreme weather events and will require localized resilient energy resources to support relief efforts.

For the City of Boulder, a September 2013 flood emphasized the need for energy resilience to provide critical emergency services. Over an eight-day period, 16 inches of rain fell, resulting in an unprecedented 100-year flooding event.[2] Critical infrastructure was damaged, forcing two water treatment facilities to close. Thousands of households experienced power outages.[3] Residents turned to community institutions for support, but the widespread outages meant that critical services were either offline entirely or severely debilitated.

As part of the Department of Energy's Resilient Energy Delivery Infrastructure (REDI) initiative, which funded development of smart grid technologies in local governments that have experienced a recent major disaster, the City of Boulder partnered with Boulder Housing Partners (BHP) to create resilient energy resources for an affordable housing community. BHP is the housing authority for the City of Boulder and is responsible for a third of all affordable housing in Boulder. The BHP Resilience Upgrades project demonstrates how solar+storage can reliably power critical community services for residents of affordable housing communities.

THE SOLUTION: **Hybrid Solar PV plus Battery Storage System**

Through a partnership with the City of Boulder, Independent Power Systems (IPS), and GRID Alternatives, BHP installed a solar+storage system at their North Boulder headquarters. This system will allow BHP headquarters to remain operational during an outage and provide services to residents. The system also better equips the facility as a command post for police and fire in the event of an emergency or disaster. The resilience upgrades included a solar PV array, solar battery storage, two electric vehicle (EV) chargers, a small gas generator, and a smart control system (see Appendix A).

Resilient power supply. In the event of a power outage, an automatic transfer switch allows the system to operate independent of the grid and continue power to the facility's critical loads, including web servers, electrical outlets, heating systems, landline telephones, and Wi-Fi. The inclusion of two 16-amp EV charging stations will ensure reliable transportation during a grid outage.

The system will come online in less than one second to ensure an almost seamless continuation of customer and business services. This was the case during an unexpected June 2018 outage. When grid power failed, the solar+storage system came on immediately and BHP staff was able to continue business operations as normal.

In the event the solar array cannot sustain adequate energy levels, a 6-kilowatt natural gas / propane powered DC generator will act as an additional power source to charge the batteries. Furthermore, the inclusion of two 16-amp EV charging stations in the critical loads supported when the grid is down will ensure reliable transportation during an emergency.

Financial benefits. In addition to powering critical loads in instances of short-term and sustained outages, the solar+storage system also provides financial benefits. Energy from the rooftop solar array will offset BHP electric costs up to $1,145 annually.

Smart controls. Dencor and IPS Smart Control Systems were installed to regulate the solar array and prioritize power to critical loads when solar availability is limited. The smart control systems also improve the facility's electrical efficiency and reduce energy costs by shifting the timing of non-critical loads to reduce demand, effectively reducing demand (and associated demand charges) by timing when loads are utilized.

Emissions reduction. Assuming the solar array meets expectations and produces 30 megawatt-hours of electricity annually, BHP headquarters will offset 40,000 pounds of CO_2 emissions that would have otherwise been emitted as a product of grid supplied electricity. Comparatively, when operating at 100 percent load, the natural gas generator emits almost twice as much CO_2 (13.6 pounds of CO_2 per hour) as the same amount of energy produced by the grid (7.8 pounds of CO_2 per hour).

Unlike the grid, emissions from the generator do not decrease proportionate to decreases in load levels. When load was reduced to 50 percent, the generator emissions saw only a 35 percent decrease in emissions. A 75 percent reduction in generator load resulted in a mere 44 percent emissions decrease. This means that the generator runs less efficiently when serving less load. Incorporating energy storage into the resilient system design ensures that the generator will be able to be run more efficiently.

Project Overview

Owner: Boulder Housing Partners

Location: Boulder, Colorado

Equipment: 20.67-kW rooftop photovoltaic solar array; 24 6V SunXtender lead acid batteries (18-kW/45-kWh); three SMA Sunny Island 6048 battery-based inverters; critical load panel current transformers; Dencor & IPS Smart Solar Control systems; 6-kW natural gas/propane generator.

Installed cost: $143,476 (not including the 6-kW natural gas / propane generator)

Building loads supported: During a grid outage, the solar+storage systems will provide power to critical loads, including servers, outlets, heating, phones, Wi-Fi, and EV chargers.

Services provided: Backup power, EV charging, and cost savings through solar generation and demand response

Supported infrastructure: Affordable housing headquarters

Project partners: City of Boulder, Boulder Housing Partners, GRID Alternatives, Independent Power Systems, Clean Energy Group, U.S. Department of Energy

Solar System Details

Solar system size: 20.67-kW

Configuration: Rooftop solar

Solar system estimated annual production: 30.5 MWh

Ownership structure: Direct ownership

System owner: Boulder Housing Partners

Revenue sources: Net-metered solar generation

Energy Storage System Details

Type of technology and size (power-kW / capacity-kWh): 24 6V lead acid batteries (18-kW/45-kWh)

Energy storage technology provider: SunXtender

Energy storage system location: Partially enclosed parking structure

Date of service/operation: Spring 2018

Energy storage system owner: Boulder Housing Partners

Funding sources: The energy storage system was paid for by BHP, with additional funding provided by a U.S. Department of Energy REDI grant and a Clean Energy Group Resilient Power Technical Assistance Grant.

Revenue sources: Demand charge management

FINANCIAL DETAILS

Project costs and grant funding. The total cost of the solar+storage system, including solar PV, battery storage, and smart control systems, was $143,476. The installed cost of the solar PV array was $67,013, and the battery storage system installed cost was $67,464. The Dencor Control Systems were an additional $8,997.

Project costs were contributed by BHP and federal grant funds, with BHP covering $77,746 and the REDI grant providing $66,000. The City of Boulder was also awarded a Resilient Power Technical Assistance Fund grant from Clean Energy Group to conduct technical and financial feasibility analysis on several properties.

The Economic Case for Energy Storage. The resilience upgrades at BHP headquarters have already proven to reduce utility expenses and prevent outage costs. Considering only the estimated avoided outage costs and electric bill savings from the solar PV array, the system's simple payback is estimated at 19.3 years. Outage calculations are described in more detail below, as well as the costs associated with the natural gas generator installed and opportunities for demand charge savings.

Demand costs

BHP compared electric bills from 2017, prior to the upgrades, with bills from 2018. For the March-April utility bill period, it is estimated that the Dencor Smart Control Systems reduced demand by 29 percent and resulted in $456 facility demand charge savings (see Appendix B). Reductions in demand and demand

charges will vary by month, but these initial findings suggest that demand savings could be significant over time.

Outage costs

Taking into consideration losses in service, revenue, and potential expenses, BHP estimated $2,500 in downtime costs for the headquarters per every hour of power outage. In instances of prolonged outages, this figure would increase as additional downtime service costs would need to be factored in. According to the distribution service provider in Boulder, Public Service Company of Colorado, approximately two and a half hours (or 151 minutes) of power outages occur each year. Using the estimated $2,500 in hourly downtime costs, the total cost of outages incurred by BHP totals approximately $6,295 annually.

LESSONS LEARNED

Numerous lessons were learned through the development process and initial operations of the Boulder Housing Partners Resilience Upgrades project.

Reliable power. On June 4th, 2018 BHP experienced an hour-long outage, the first since the system was installed. During that time, BHP operations continued as normal. In fact, most BHP staff had no idea they had lost power. Additionally, in the first few months of operation, the solar PV array has already reduced monthly utility costs, and the smart control systems, in partnership with the solar PV array, have resulted in demand charge savings.

Backup generator for battery charging. While the generator could be used as the sole provider of backup power, heightened grid emissions at lower capacity loads indicates it is most efficient when operating at 100 percent load to replenish the batteries. By using the generator as backup for charging the batteries, BHP effectively diversified emergency power resources, improved generator operational efficiency, reduced emissions, and ensured continued battery functionality in the event of inadequate solar availability.

Outage costs in system economics. By quantifying outage-related costs, a monetary value can be assigned to the power provided by resilient power systems in the event of grid failure. At BHP headquarters, estimated annual outage costs totaled $6,295. Factoring outage cost savings into the payback of the system reduced the simple payback by three years (from 22.8 years to 19.3 years). As the occurrence and severity of natural disasters increase so too will the annual savings from avoided outages, further improving the economics and payback of the solar+storage system.

APPENDICES

A. System Design
B. 2017-2018 Demand Charge Comparison
C. Photos

APPENDIX A: System Design

Figure 1 – BHP's Resilient System Architecture[1]

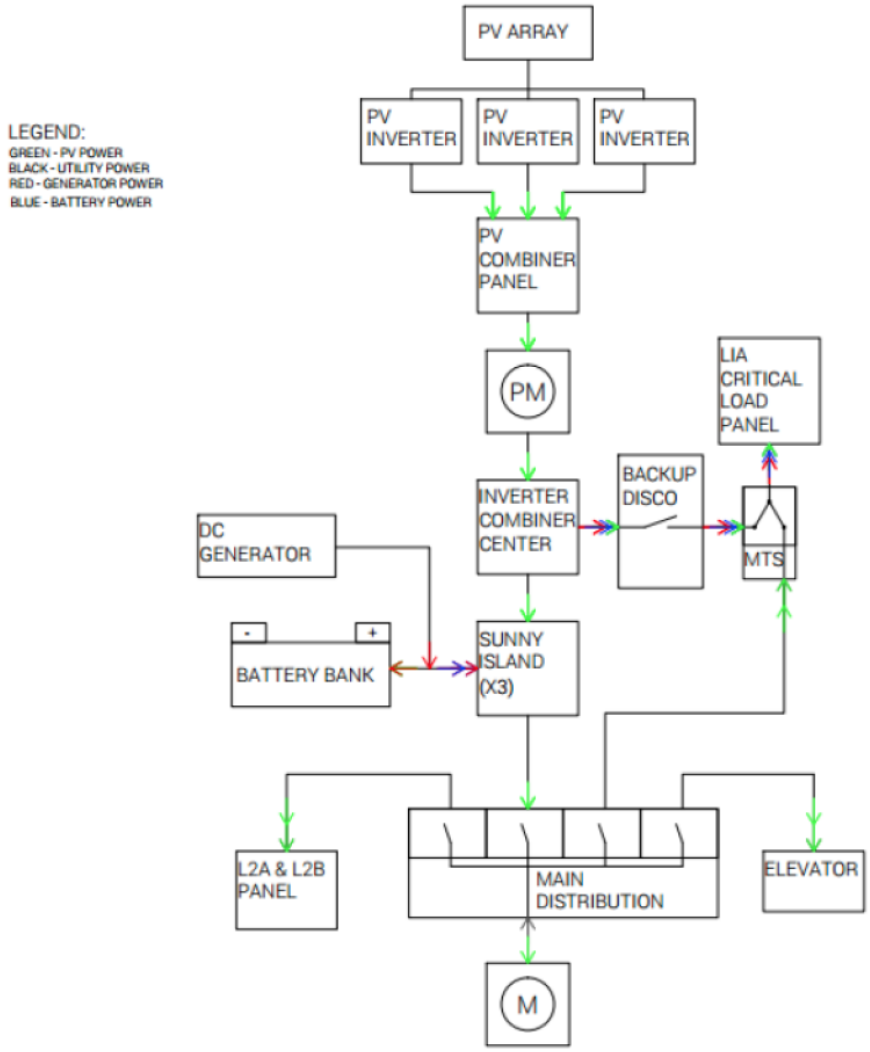

[1] "Resilient Energy Delivery Infrastructure Grant Final Report," by Brett KenCairn & Lex Telischak, City of Boulder, 06/29/2018, pg. 13.

APPENDIX B: 2017-2018 Demand Charge Comparison

These charts compare 2017 and 2018 demand charges for the months of March-April and April-May. On average, BHP headquarters reduced demand by 5-kW and decreased facility demand charges by 14 percent. Reduction in energy costs varied widely dependent on the month, with 35 percent reduction/$456 cost savings for March-April, and 6 percent reduction/$56 cost savings for April-May.

Figure 2 – Electric Bill Comparison and Differences at BHP for Spring[2]

Electric Bill Comparison from 2017 to 2018	2017			2018		
	kW	kWh	Total Bill	kW	kWh	Total Bill
Mid-March through Mid-April	31.68	12160	$1,278.22	27	8644	$ 822.00
Mid-April through Mid-May	36	9354	$ 940.37	31	8837	$ 883.92

Difference from 2017					
kW	%	kWh	%	Total Bill	%
4.68	14.77%	3516	28.91%	$ 456.22	35.69%
5	13.89%	517	5.53%	$ 56.45	6.00%

[2] "Resilient Energy Delivery Infrastructure Grant Final Report," by Brett KenCairn & Lex Telischak, City of Boulder, 06/29/2018, pg. 11.

APPENDIX C: Photos

BHP inverters and battery bank. ©Independent Power Systems

BHP energy storage unit. ©Clean Energy Group

Boulder Housing Partners office in Boulder, Colorado. ©Independent Power Systems

Sources

"Resilient Energy Delivery Infrastructure Grant Final Report," by Brett KenCairn & Lex Telischak, City of Boulder, 06/29/2018

ENDNOTES

[1] "A Disaster in the Making: Addressing the Vulnerability of Low-Income Communities to Extreme Weather," by Tracy Ross, *Center for American Progress*, 2013. https://www.scientificamerican.com/article/extreme-weather-hits-poorest-hardest/

[2] "The 2013 Boulder Flood: Four years and three billion dollars later," by Ben Castellani, *Boulder Cast*, 09/13/2017. https://www.bouldercast.com/the-2013-boulder-flood-two-years-and-three-billion-dollars-later/

[3] "Historic Rainfall and Floods in Colorado," by Michon Scott, *NOAA Climate*, 09/17/2013. https://www.climate.gov/news-features/event-tracker/historic-rainfall-and-floods-colorado